Gearbox assembly B207

To remove

1. Place covers over the wings to keep the paintwork clean and protect it from damage.

2. Remove the upper engine cover.

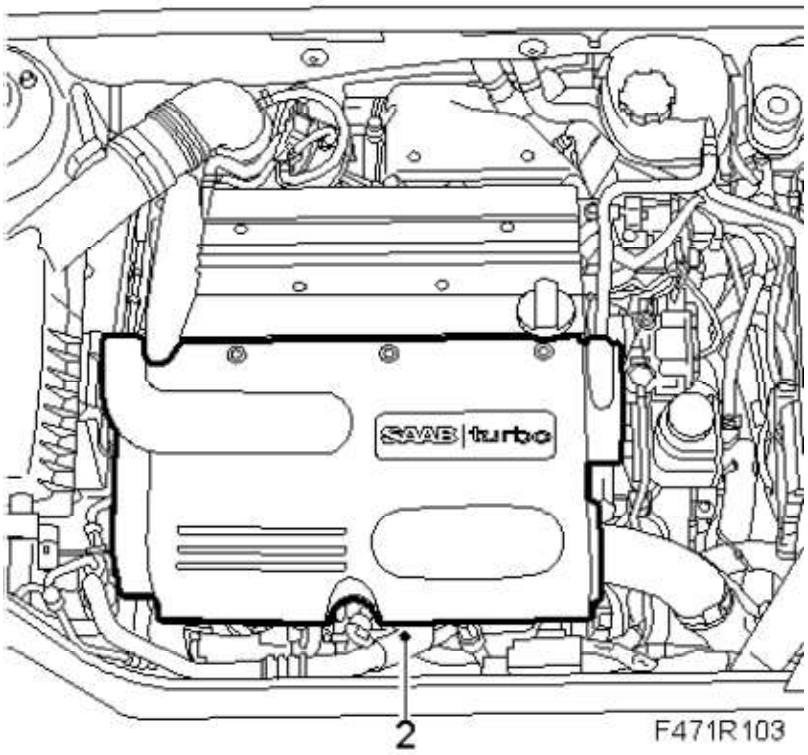

3. Remove the battery cover.

4. Disconnect the battery terminals and remove the battery and cooling pipe. Undo the cable clamp under the battery tray.

5.

Disconnect the bonnet switch.

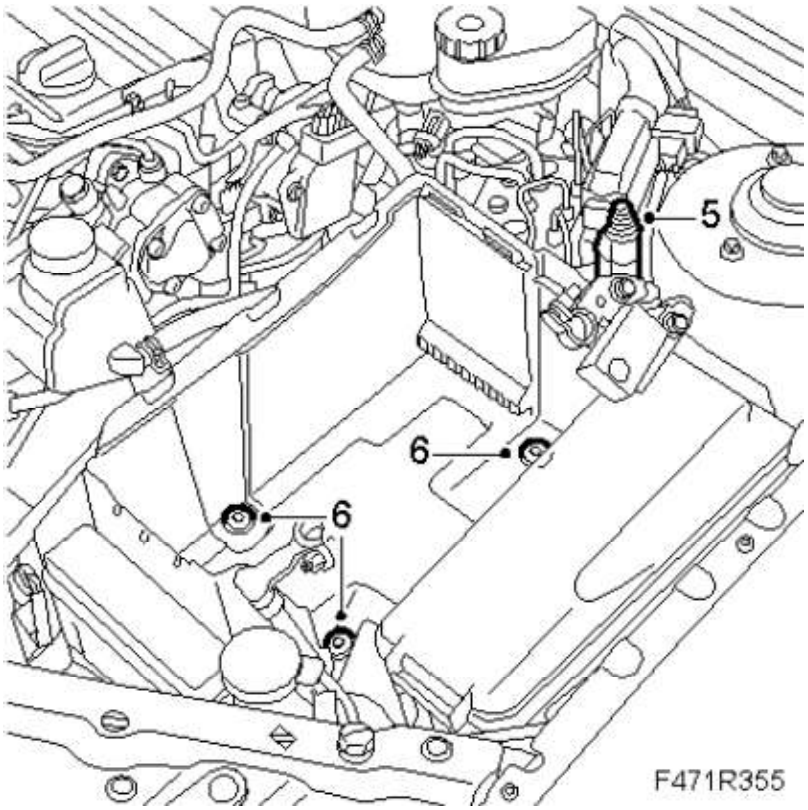

6. Remove the battery tray.

7. Disconnect the ground cable from the engine bracket and the reversing light switch connection.

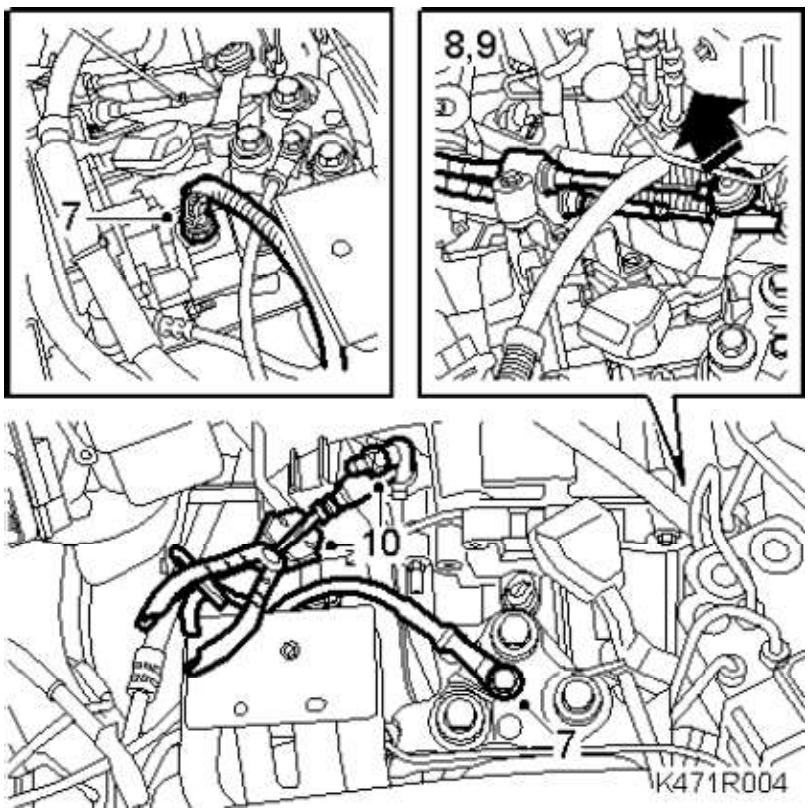

8. Remove the gear cables from the gearbox by pulling the locking sleeves back.

9. Lift up the cables from the levers.

10. Fit 30 07 739 Hose pinch-off pliers to the clutch hose and undo the quick-release coupling from the clutch slave cylinder.

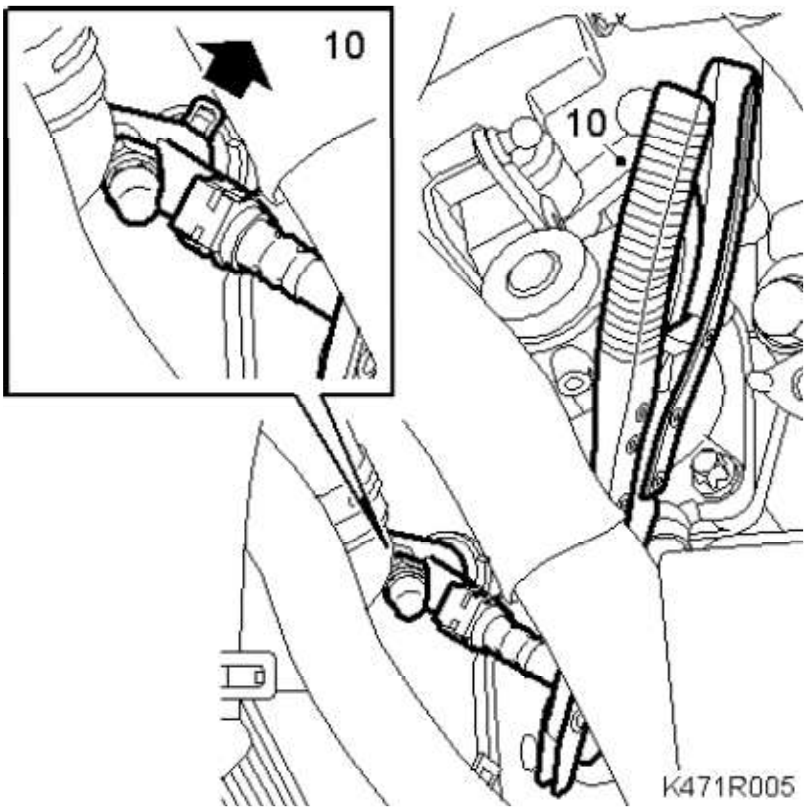

11.

Remove the upper bolts from the gearbox.

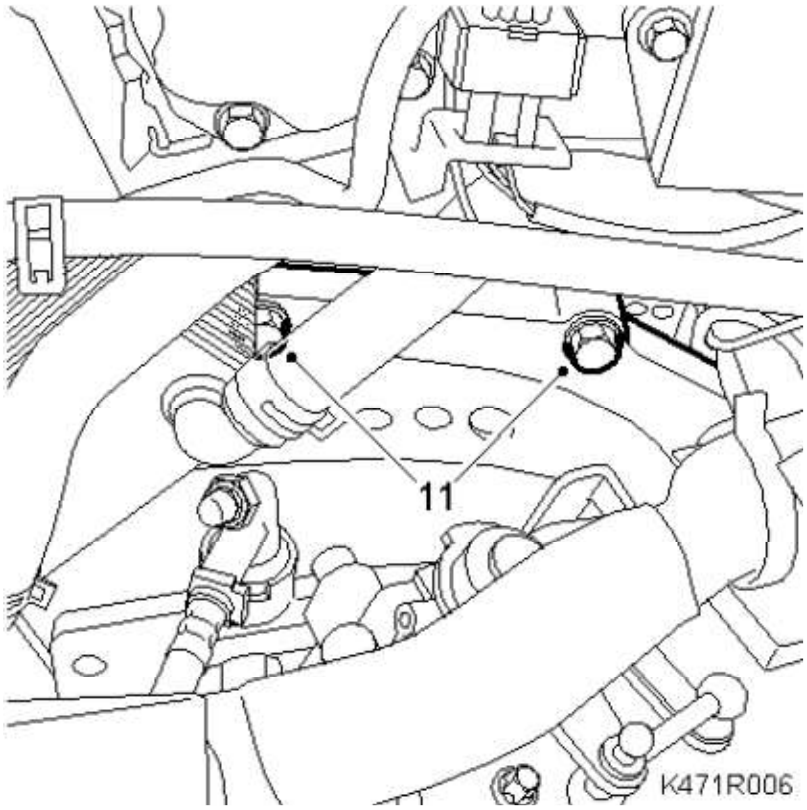

12. Unhook the coolant reservoir.

13. Fit 83 96 178 Lifting eyes, B207 to the engine and 83 94 850 Lifting beam and 83 95 287 Holder. Swap the position of the lifting hooks on the holder.

14. Relieve the load on the engine and gearbox.

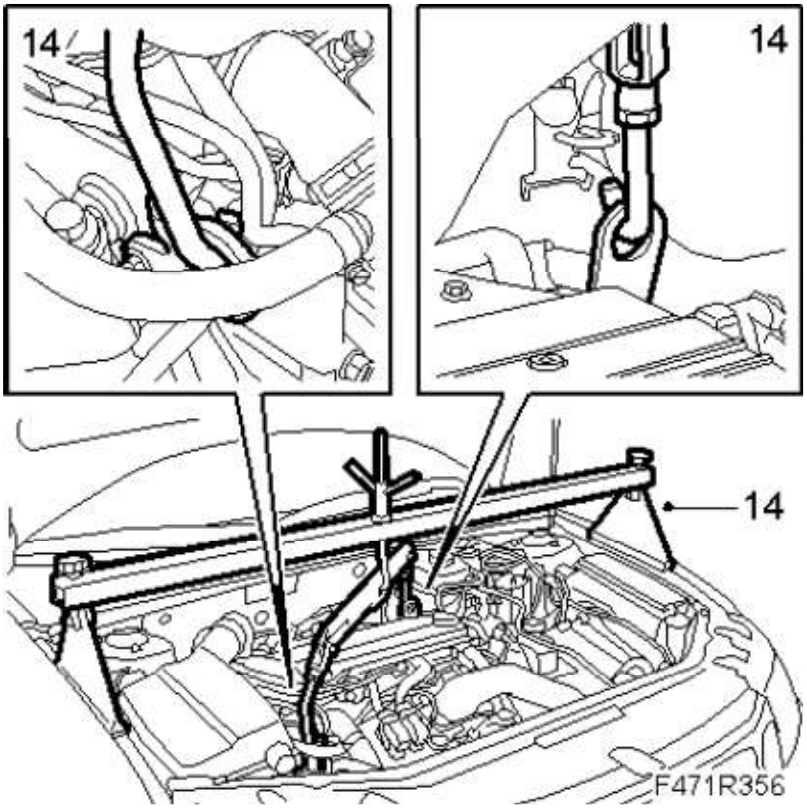

15. Undo the upper bumper shell mountings.

16. Suspend two 83 95 212 Strap in place above the radiator core so they are accessible from below.

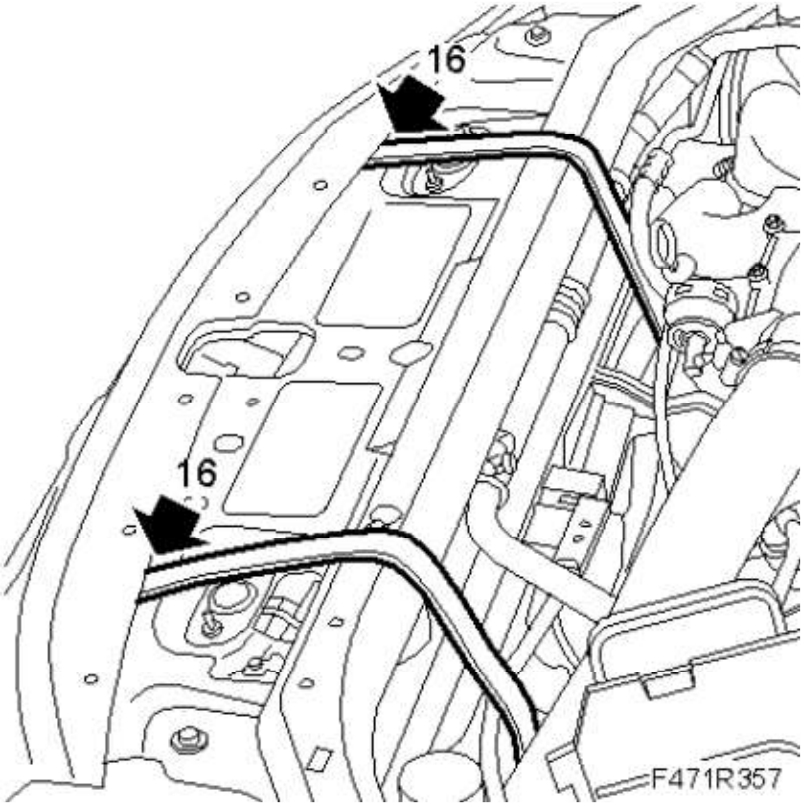

17. Raise the car.

18. Remove the front wheels.

19.

Remove the front spoiler shield. Unplug and remove the connector. **CV:** Remove Chassis reinforcement, front subframe, CV, petrol

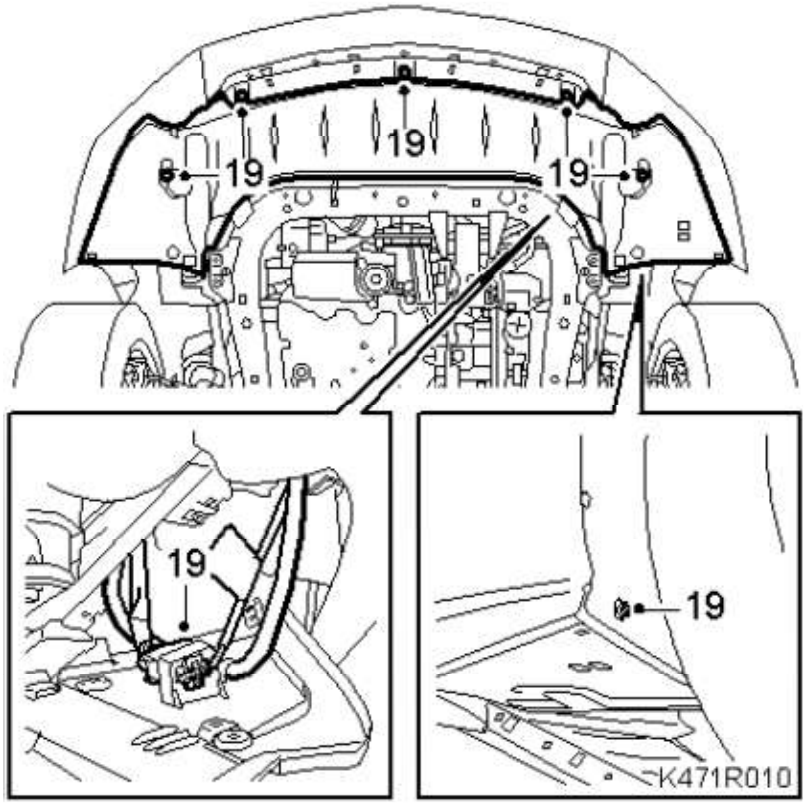

20. Secure the radiator core with the straps.

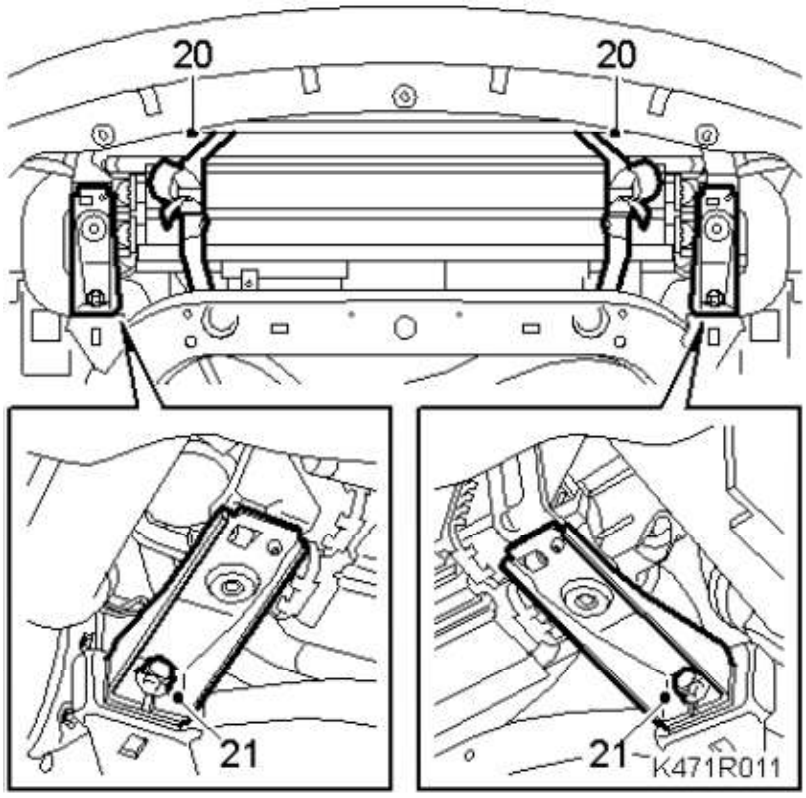

21. Remove the radiator brackets from the subframe.

22. Remove the exhaust system assembly.

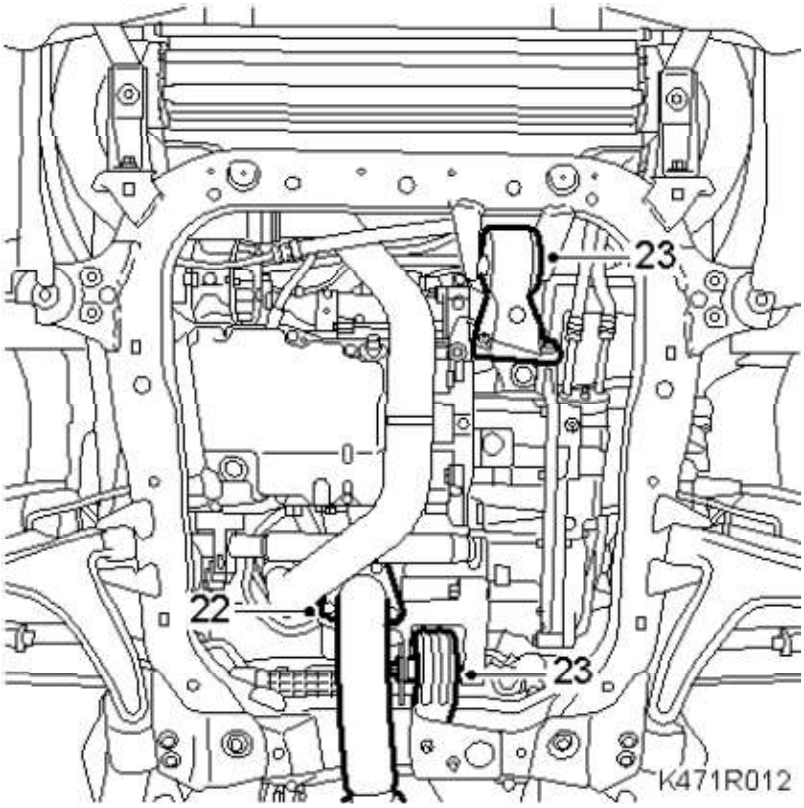

Important

The flexible bellow on the front section of the exhaust system must not be bent more than 5° from its neutral line. This means that if the front exhaust system is left hanging freely, it must not be bent more than by its own weight.

If the strain on the pipe is too great, its component parts will be permanently deformed. This can cause noise, leaks and eventually complete breakdown.

23. Remove the engine torque rod from the subframe.

24.

Remove the bolt and nut holding the suspension arm to the steering swivel member on both sides.

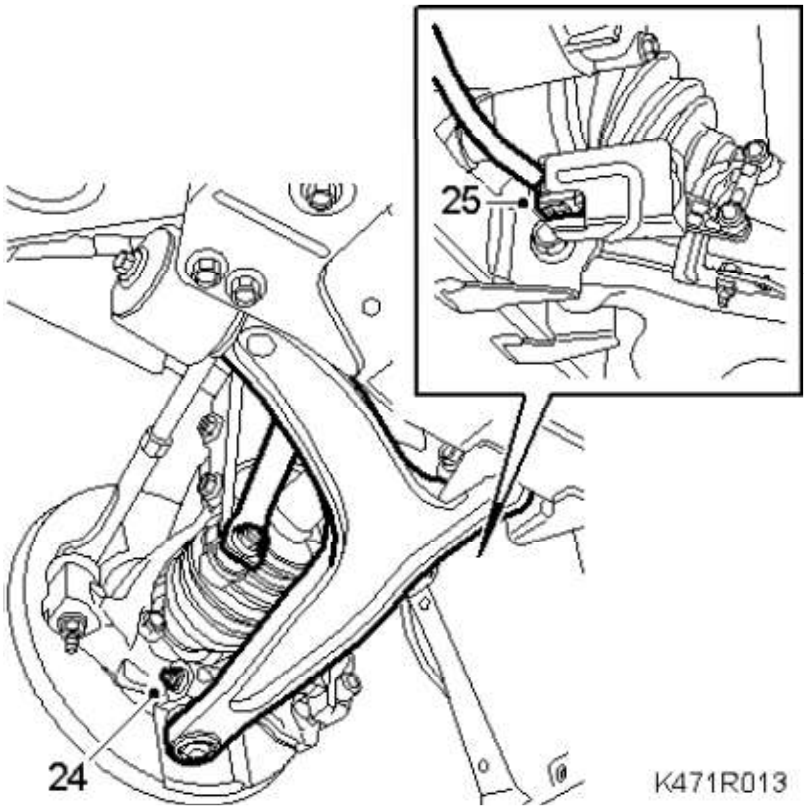

25. Unplug the connector and detach the cable clip of the headlamp angle sensor (option)

26. Remove the steering gear from the subframe.

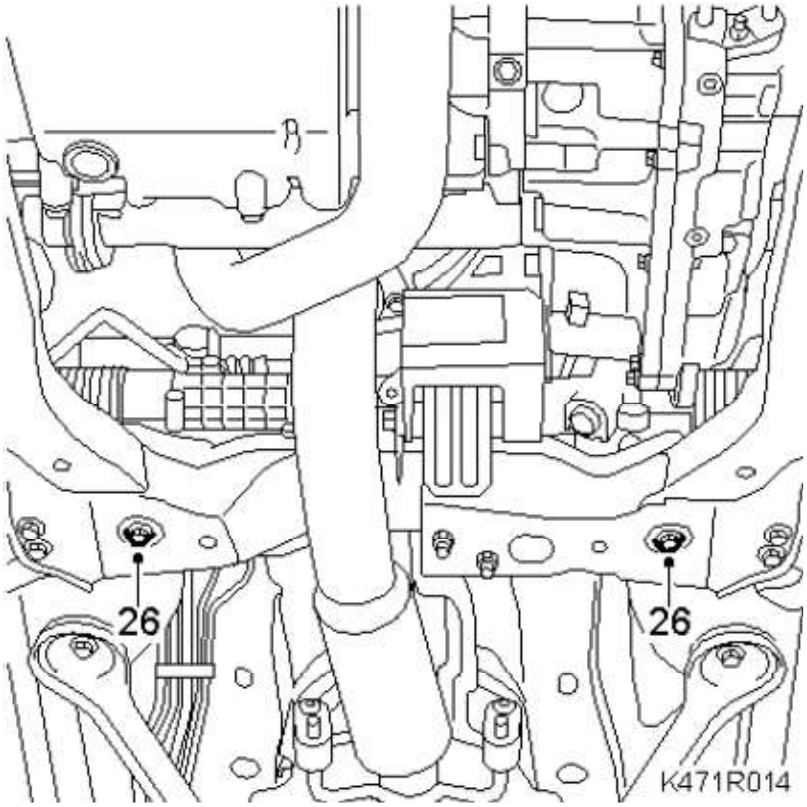

27. Put the nuts and washers in a safe place. Let the steering gear hand in place.

28. Remove the clamps holding the power steering pipe from the subframe.

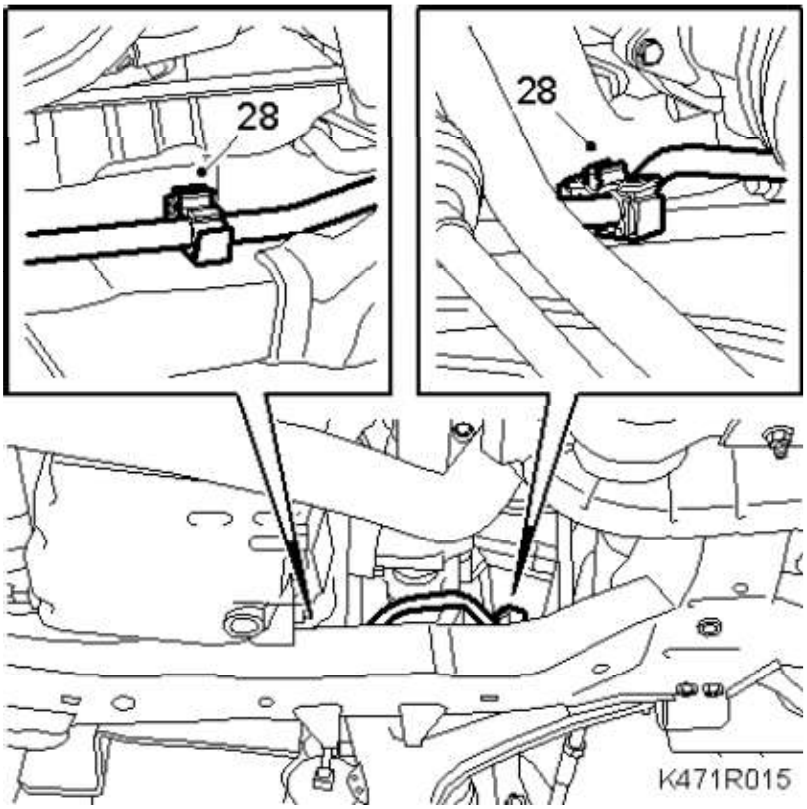

29. Detach the front part of the wing liner and bend it slightly out of the way.

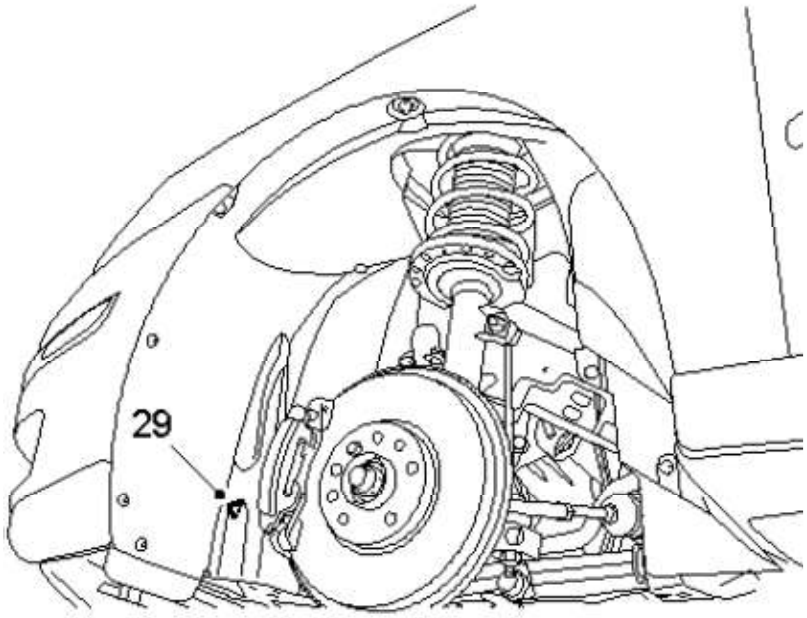

30. Place 83 95 311 Trolley lift, 83 94 801 Parent fixture, 83 95 188 Basic fixture , 83 95 170 Adapter (4 pcs) and 83 96 137 Centring tool, subframe - body under the vehicle. Position the locating pins and adjust the height of the adapters for even pressure.

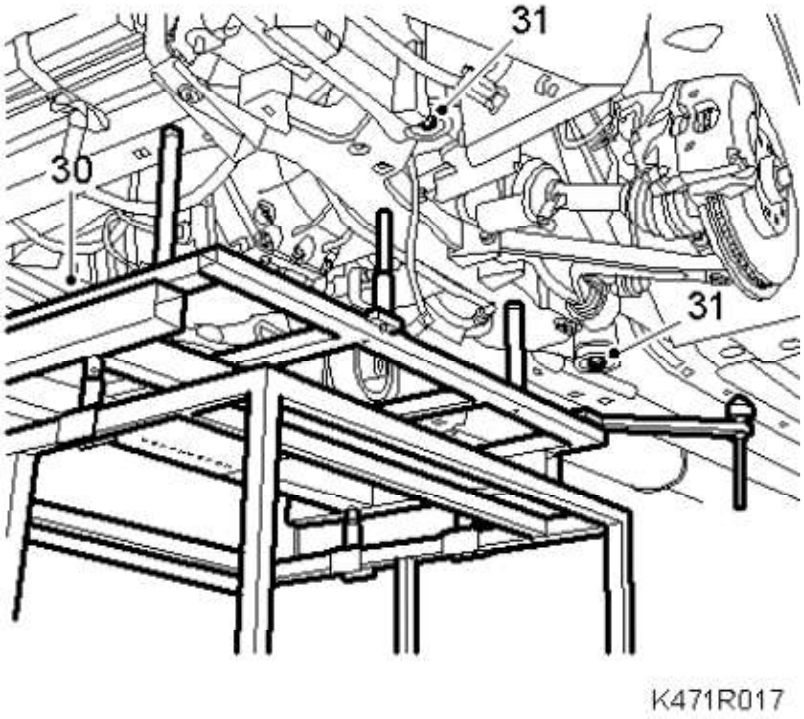

31. Remove the subframe bolts and the rear brackets.

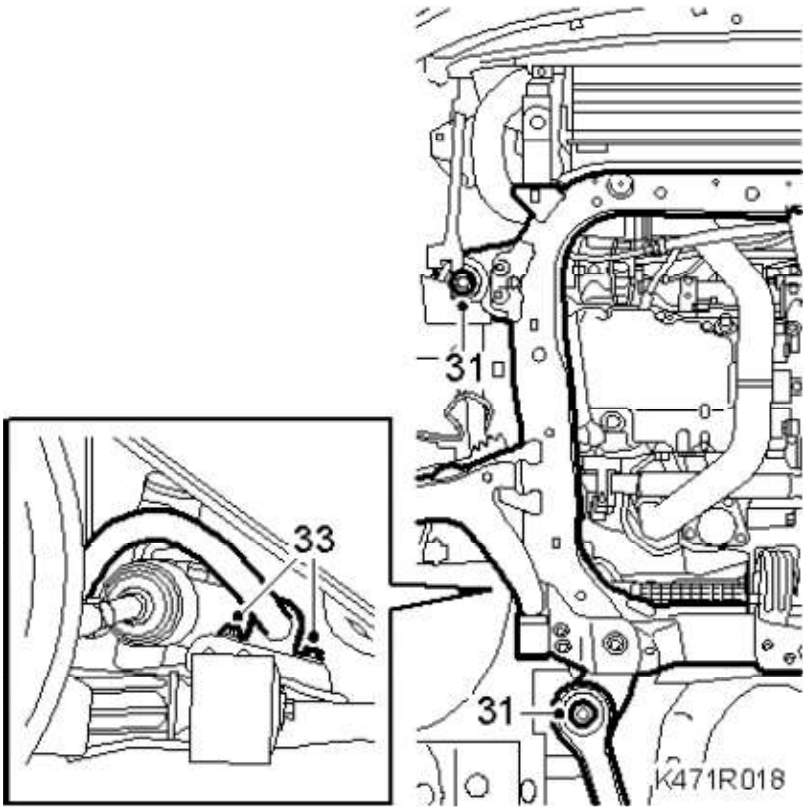

32. Lower the subframe slightly.

33. Remove the anti-roll bar from the subframe. Protect the steering gear boot.

34. Pull out the steering arm ball joints from the steering swivel members.

35. Lower the subframe.

36. Remove the two torque rod brackets from the gearbox.

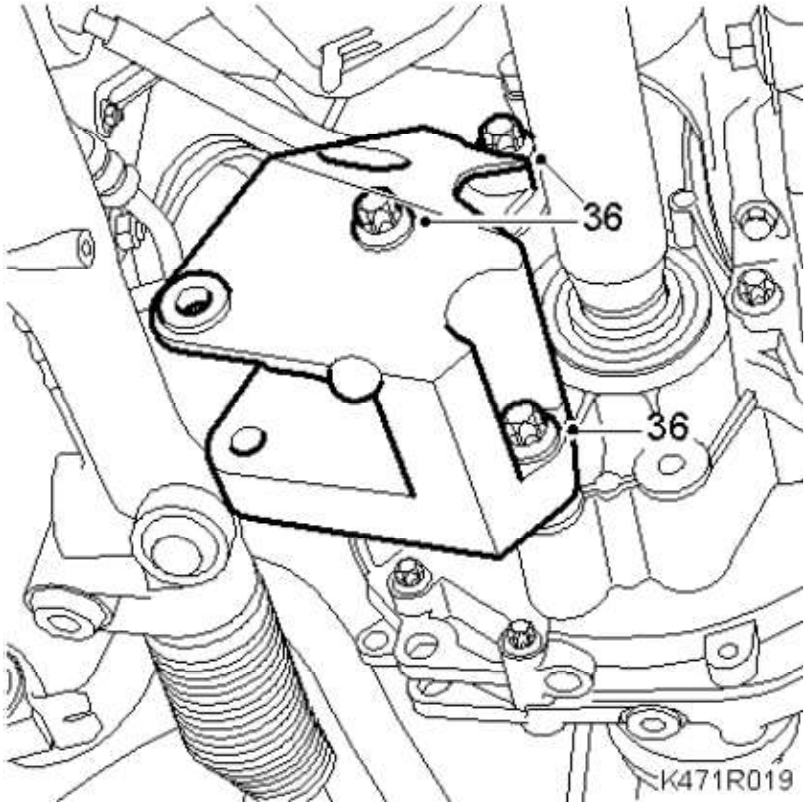

37.

Place a receptacle under the car, remove the drain plug. Drain the gearbox oil. Refit the drain plug.

Tightening torque 50 Nm (37 lbf ft)

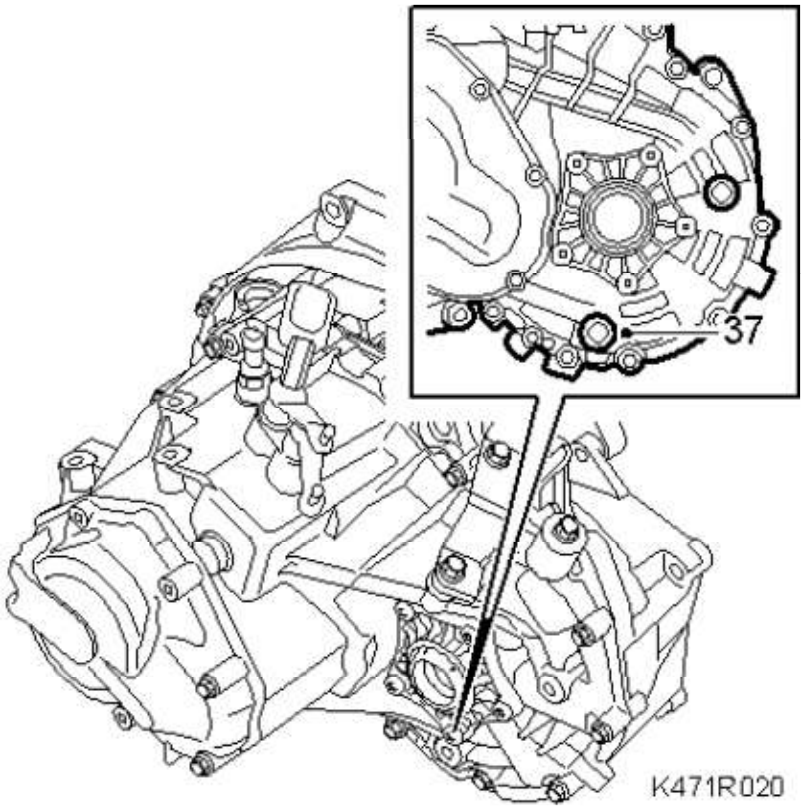

38. Remove the bolts in the charge air pipe bracket and move away the pipe.

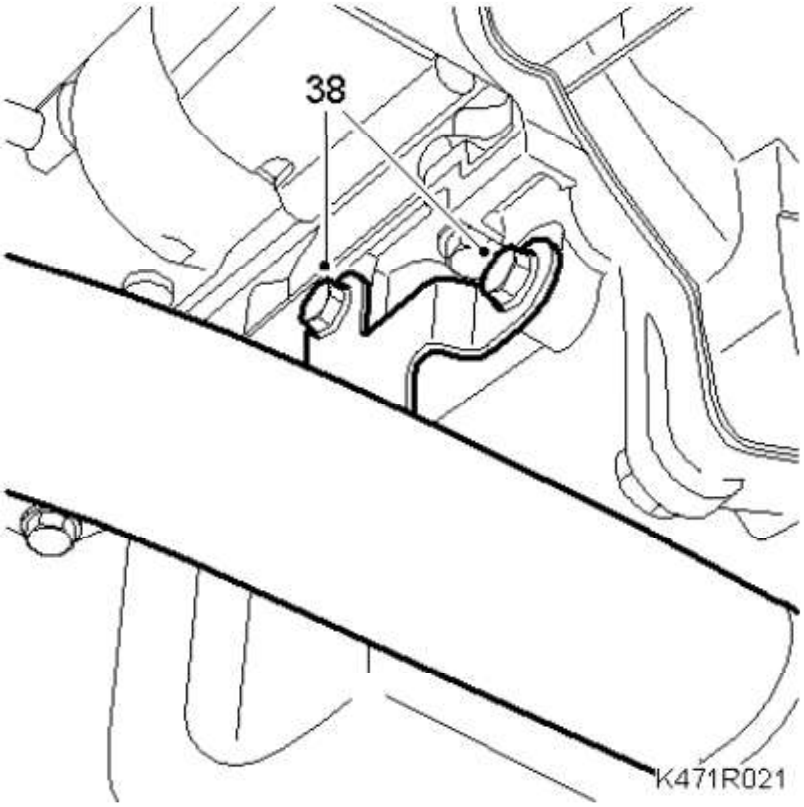

39.

Remove the lower gearbox bolts. Leave one bolt in place.

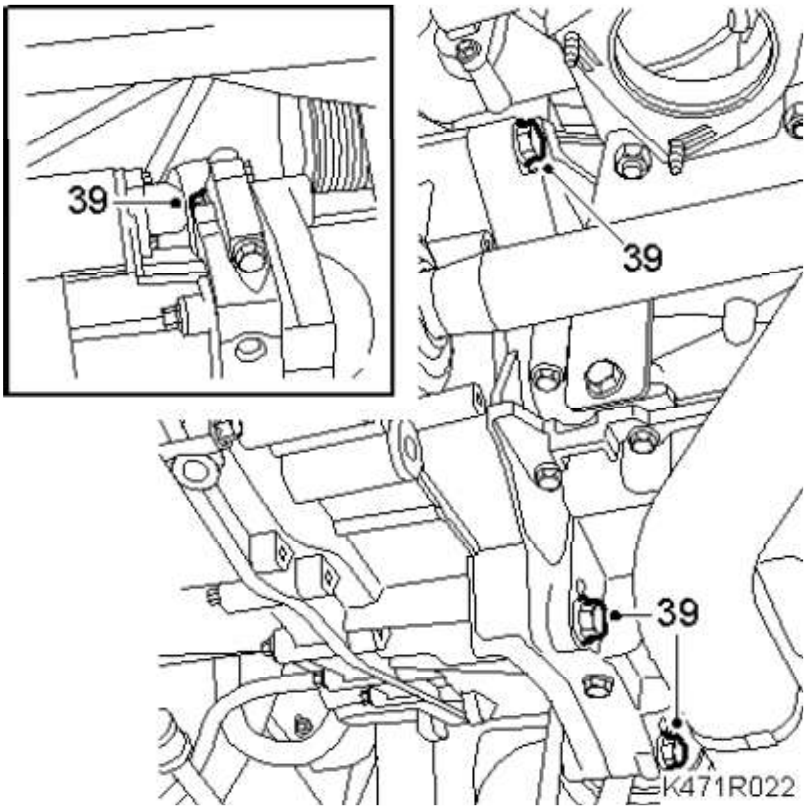

40. Detach the ABS cable from the clip using a screwdriver and undo the left-hand drive shaft using 87 92 616 Removal tool, drive shafts.

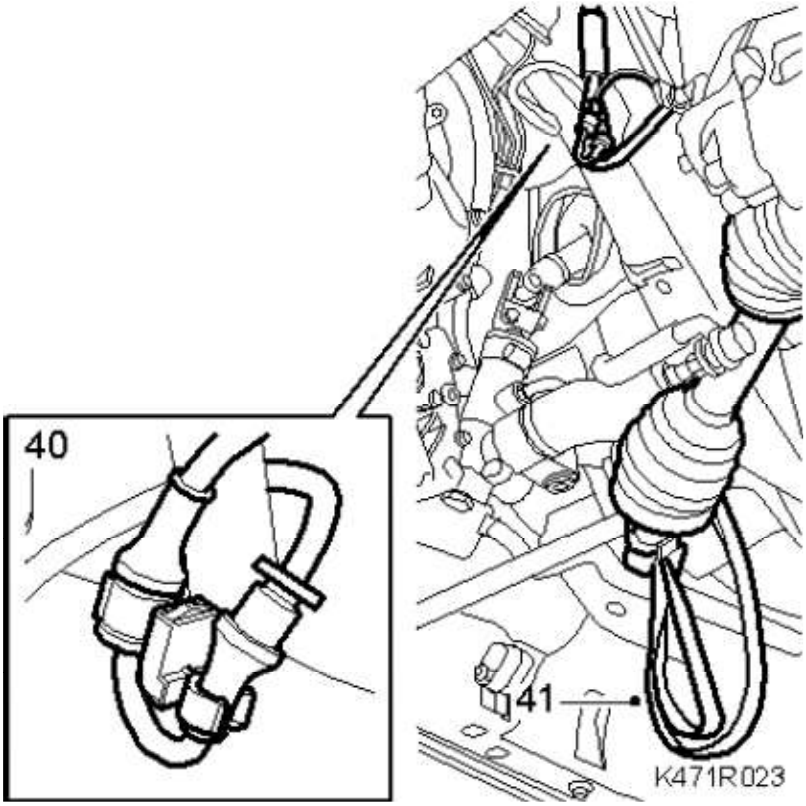

41. Suspend the shaft with a 83 95 212 Strap.

42. Lower the car, mark the positions of the bolts on the left-hand engine bracket

with a marker pen for correct refitting and then remove the bolts from the mounting.

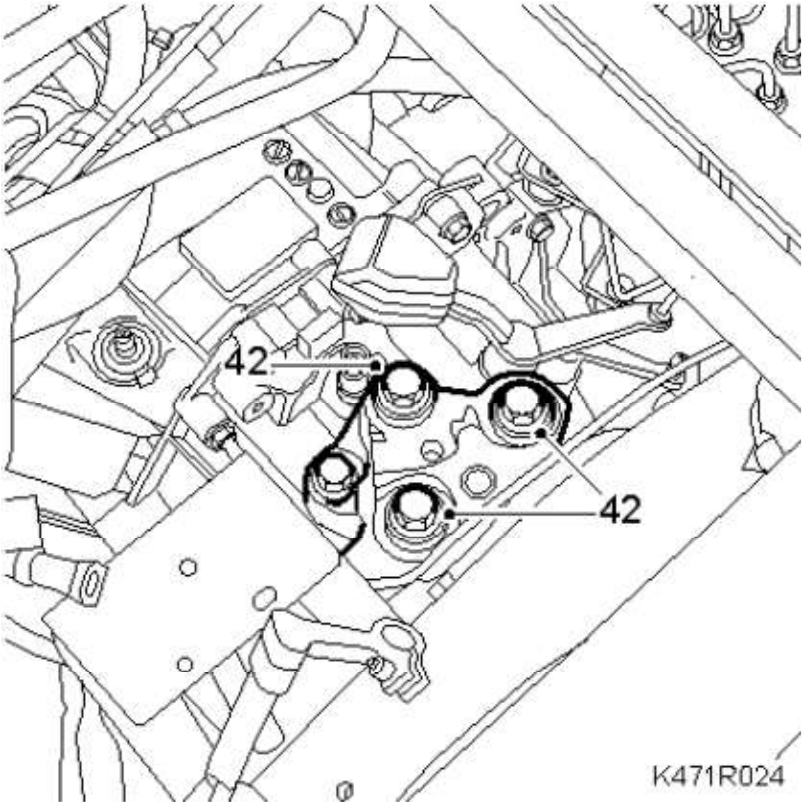

43. Lower the drive unit approx. 70 mm from the lifting beam to facilitate the removal of the gearbox. Measure the distance at the left-hand engine mounting.

44. Raise the car.

45.

Fit 87 92 608 Holder for single-column lift on a column jack. Adjust and fasten the tool in the gearbox as illustrated.

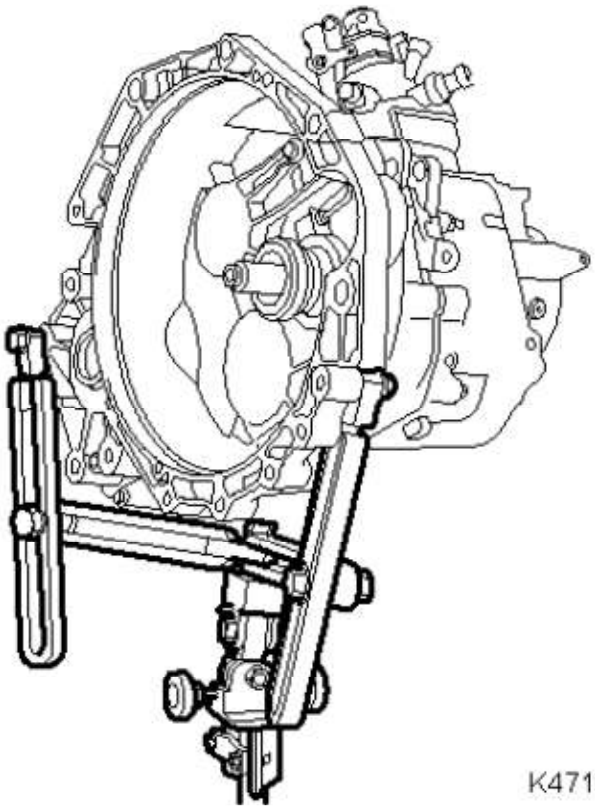

46. Remove the last bolt, pull out the transmission and lower it.

Important

The jack can tip over. Be careful.

47. Lift the transmission down from the column jack with an engine lift and 87 92 442 Lifting cable while undoing the lifting tool from the transmission.

48. Plug the holes for the drive shafts with 87 92 665 Protective plug, drive shaft hole if the gearbox is to be transported any distance.

To fit

1. If necessary, bleed the slave cylinder.

2. Lubricate the primary shaft splines, see List of lubricants and sealants.

3. Lubricate the guide sleeves on the engine with anti-corrosion agent.

4. Fit 83 95 162 Protective collar, drive shafts in the right shaft seal in the transmission. This is done to protect the seal while the transmission is being fitted. Lubricate the seal.

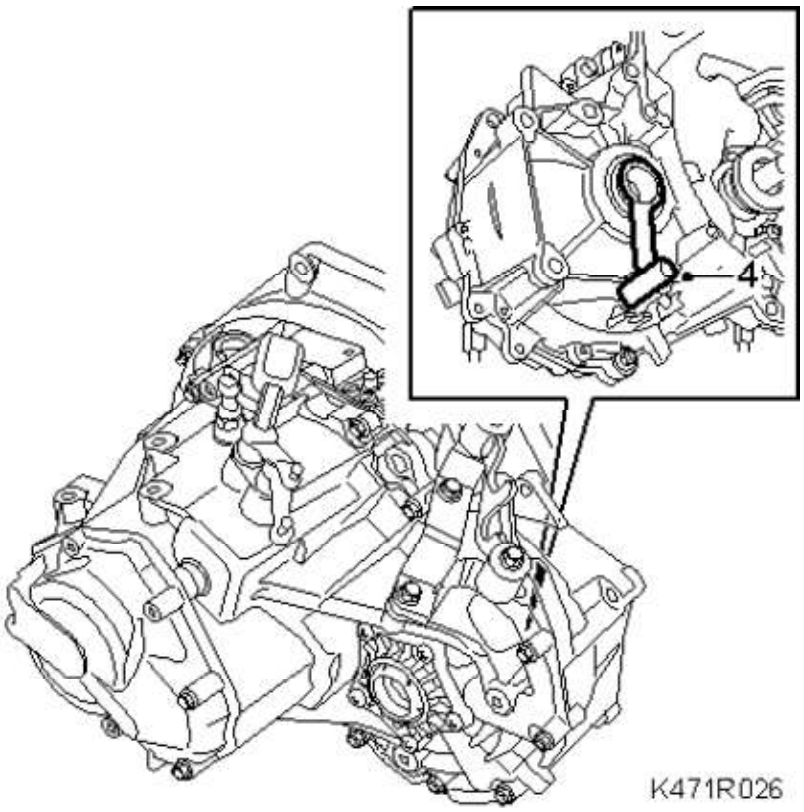

Important

Always replace the shaft seals in the gearbox. Lubricate with gearbox oil.

5. Fit the gearbox with the lifting tool on the column jack.

Important

Make sure the gear cables are positioned correctly when lifting the gearbox.

Important

Slide in the gearbox until approx. 20 mm are remaining and remove the tool 83 95 162.

6. Push in the rest of the gearbox. Turn the crankshaft if necessary to get the gearbox in place.

7.

Tighten all bolts except the top one between the engine and the gearbox.

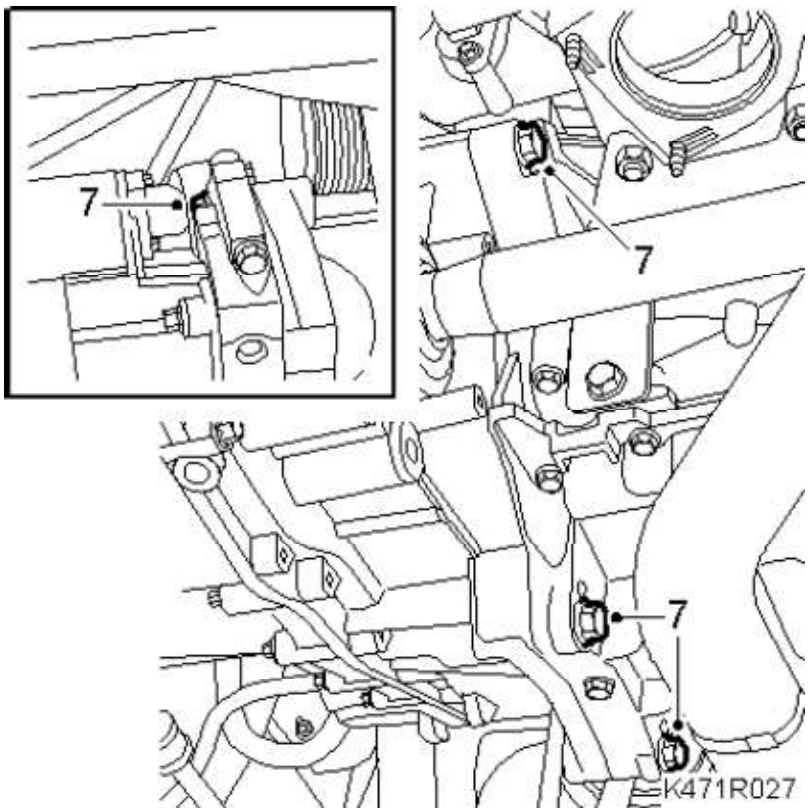

Tightening torque, M10 bolts 40 Nm (30 lbf ft)

Tightening torque, M12 bolts 70 Nm (52 lbf ft)

8. Fit the charge air pipe bracket.

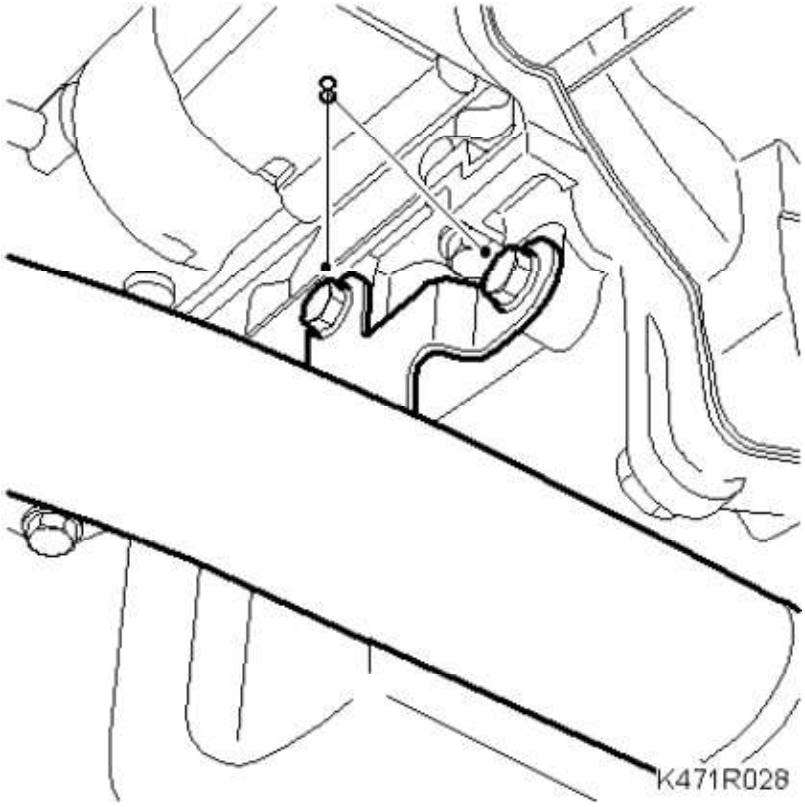

9. Remove the lifting tool from the gearbox and move away the jack.

10. Lower the car. Lift in place the power train with the lifting beam until it meets the engine mounting.

11. Fit the bracket for the engine mounting according to the marks made earlier.

    Tightening torque 70 Nm +45° (52 lbf ft +45°)

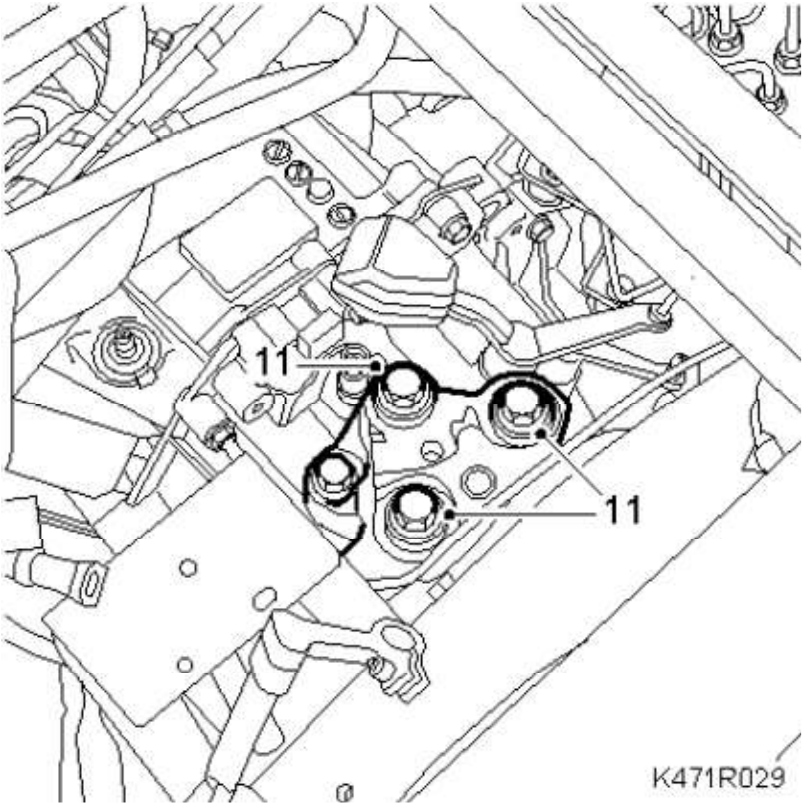

12. Remove the holder, lifting beam and lifting eyes.

13. Fit the coolant reservoir.

14.

Fit the upper bolts to the gearbox.

Tightening torque 70 Nm (52 lbf ft)

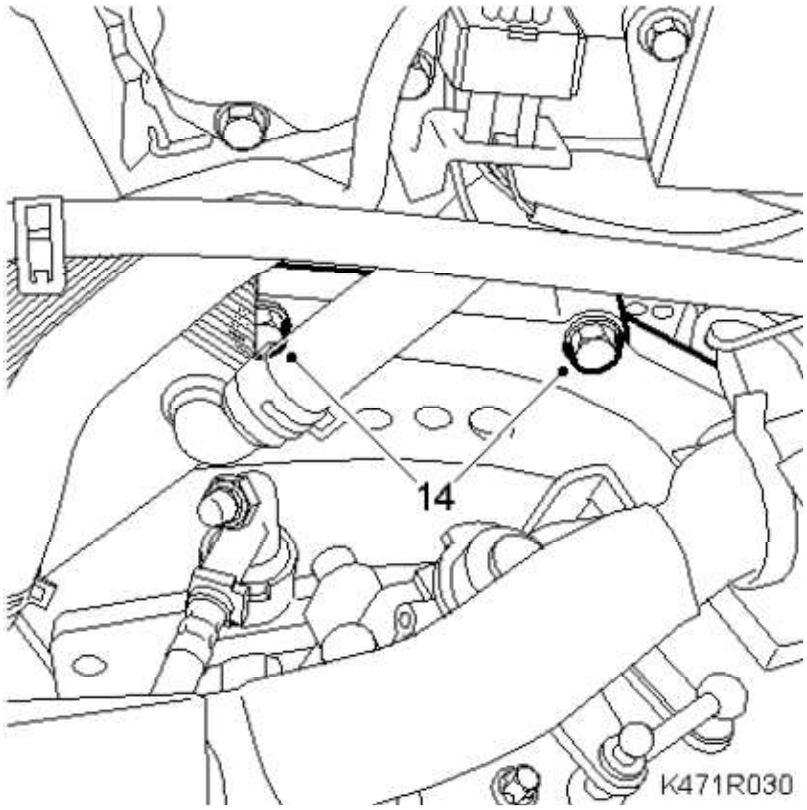

15. Raise the car.

16. Fit 83 95 162 Protective collar, drive shafts in the left drive shaft seal. Remove the strap. Make sure that the drive shaft is clean, lubricate it and then align it with the tool.

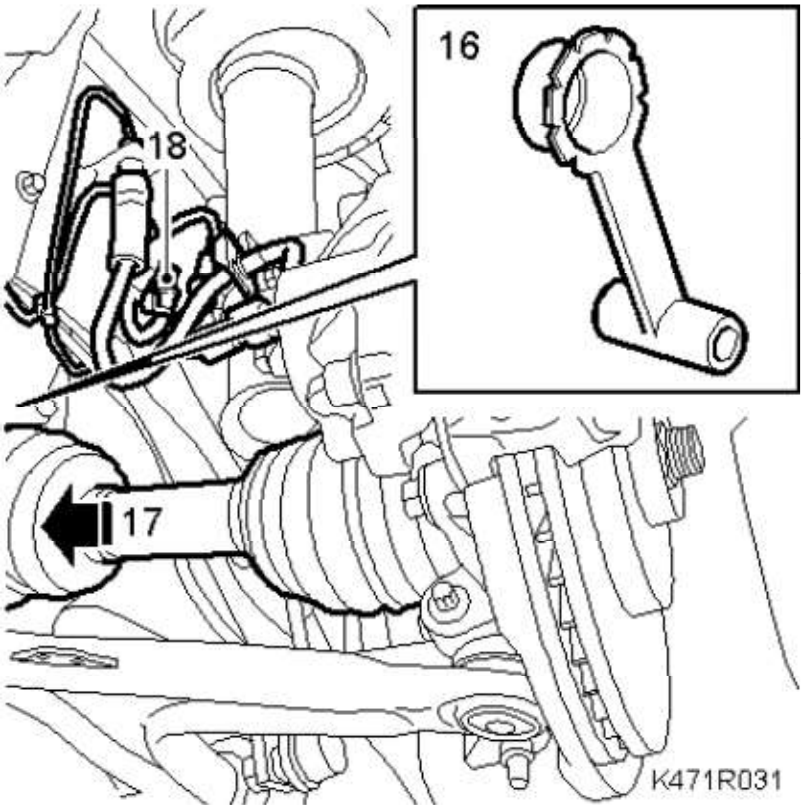

Important

Fit the driver in the gearbox until approx.20 mm are remaining and pull out the tool before the sealing surface of the shaft reaches the shaft seal.

17. Push in the rest of the drive shaft into the gearbox until the circlip clicks in.

18. Attach the ABS cable to the clip.

19. Fill with gearbox oil through the level plug hole. See Filling gearbox oil.

    Tightening torque: 50 Nm (33 lbf ft)

20. Fit the two torque rod brackets.

    Tightening torque 80 Nm (59 lbf ft)

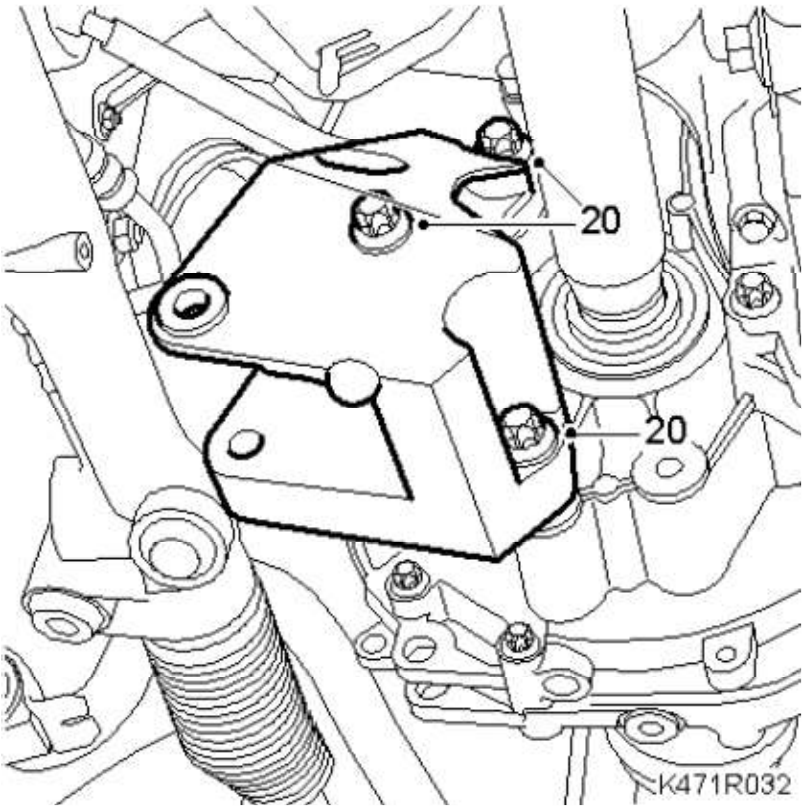

21.

Position the subframe with the help of the fixture. Raise until it is possible to fit the anti-roll bar to the subframe.

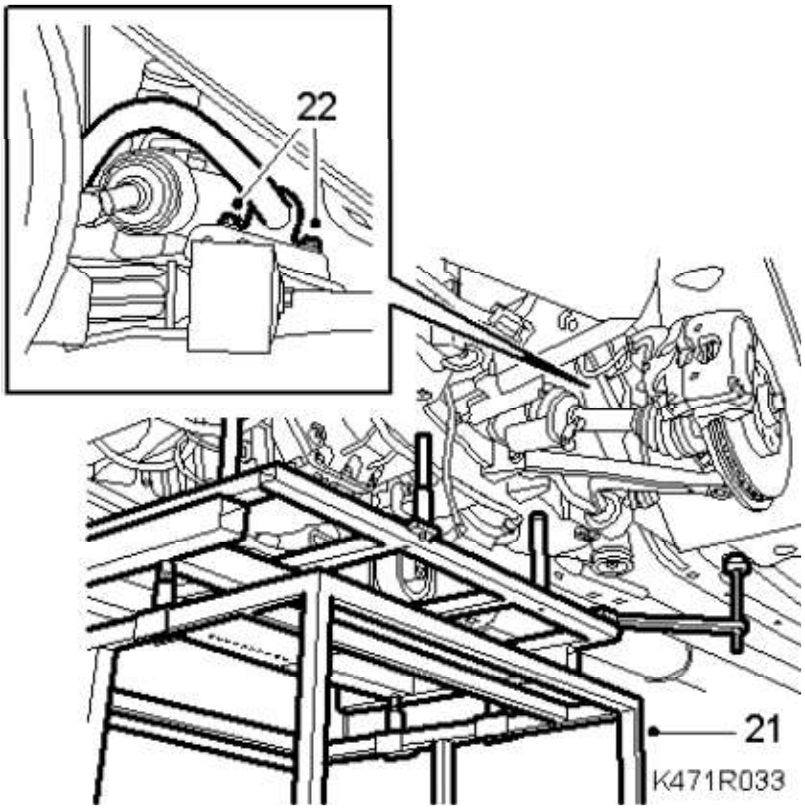

22. Fit the anti-roll bar to the subframe.

    Tightening torque 18 Nm (13 lbf ft)

23.

Fit the suspension arm ball joints to the steering swivel member.

Tightening torque 50 Nm (37 lbf ft)

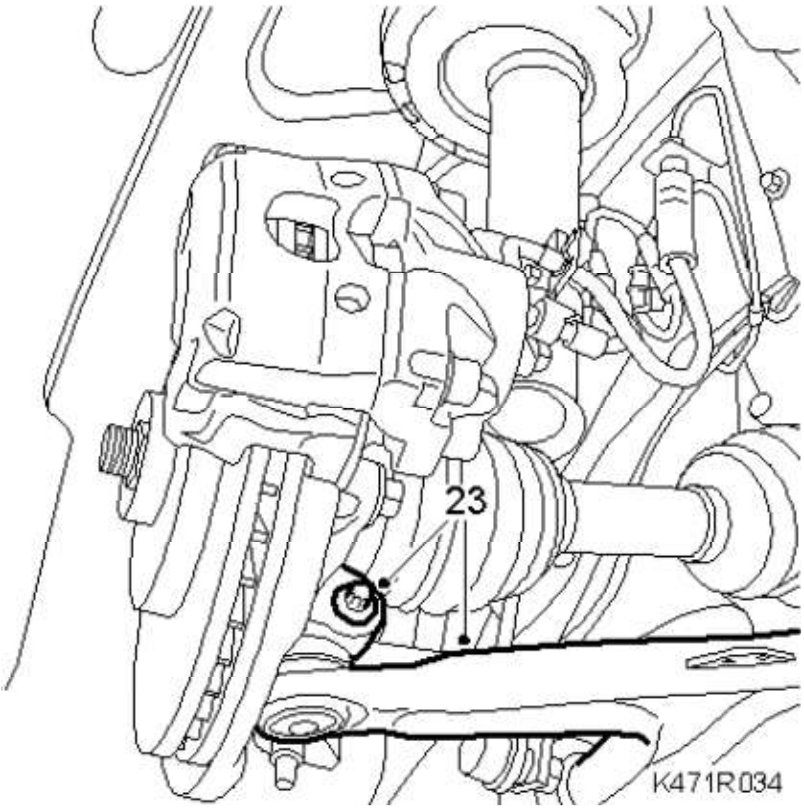

Important

Ensure that the steering knuckle stub is visible on the top of the steering knuckle housing before the bolt is fitted.

24.

Check that the guide pins fit into the reference holes, adjust the subframe until the guide pins go in easily and fit the subframe bolts and brackets.

Tightening torque, subframe: 75 Nm +135° (55 lbf ft +135°)

Tightening torque, rear subframe bolts: 90 Nm +45° (66 lbf ft +45°)

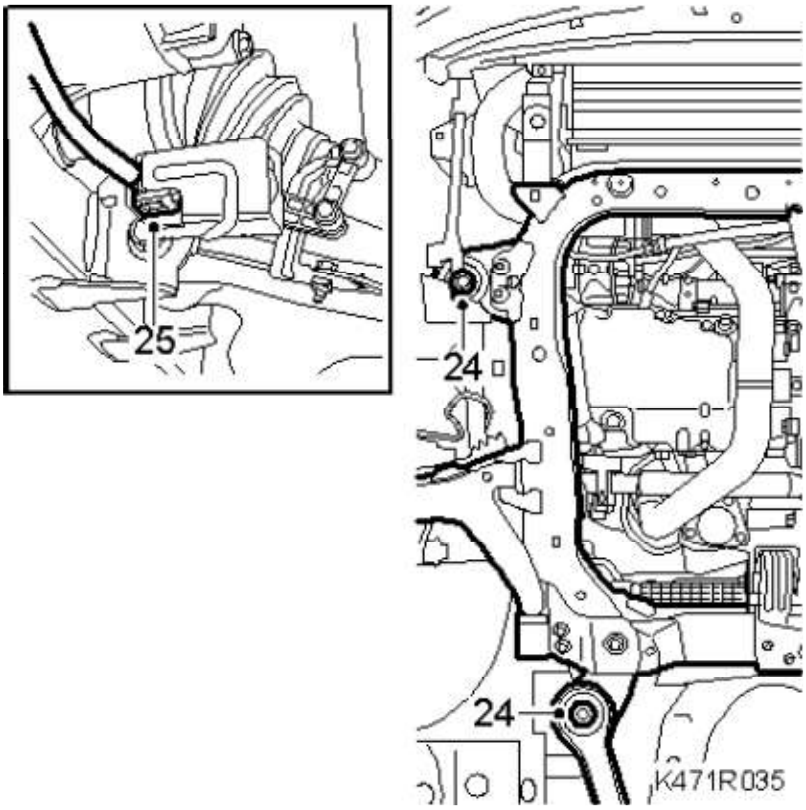

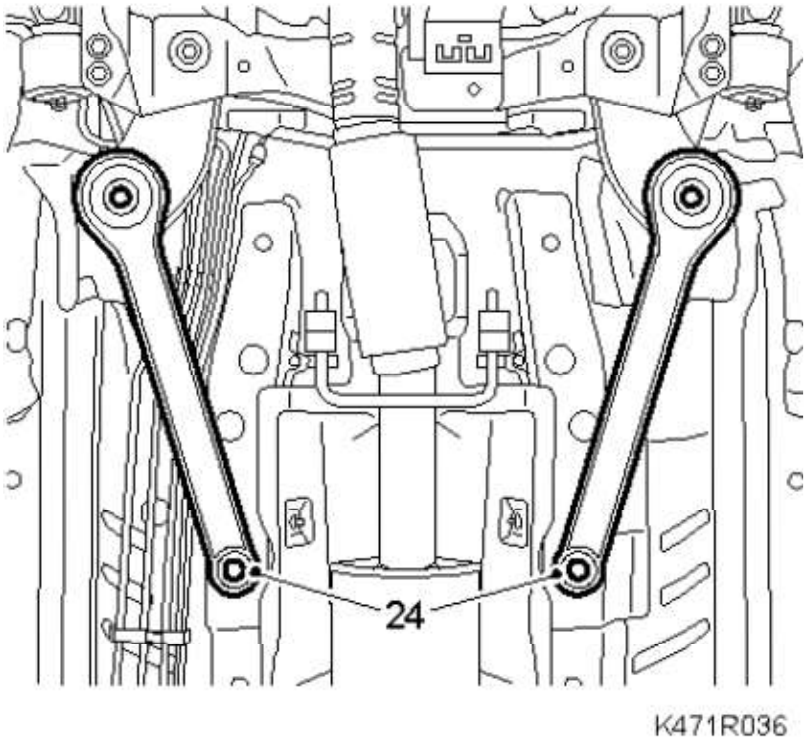

25. Connect the connector and the cable clip to the headlamp angle sensor (optional).

26. Move away the trolley lift and jig.

27. Fit the torque rods to the subframe.

Tightening torque, front: 60 Nm +90° (44 lbf ft +90°)

Tightening torque, rear 80 Nm (59 lbf ft)

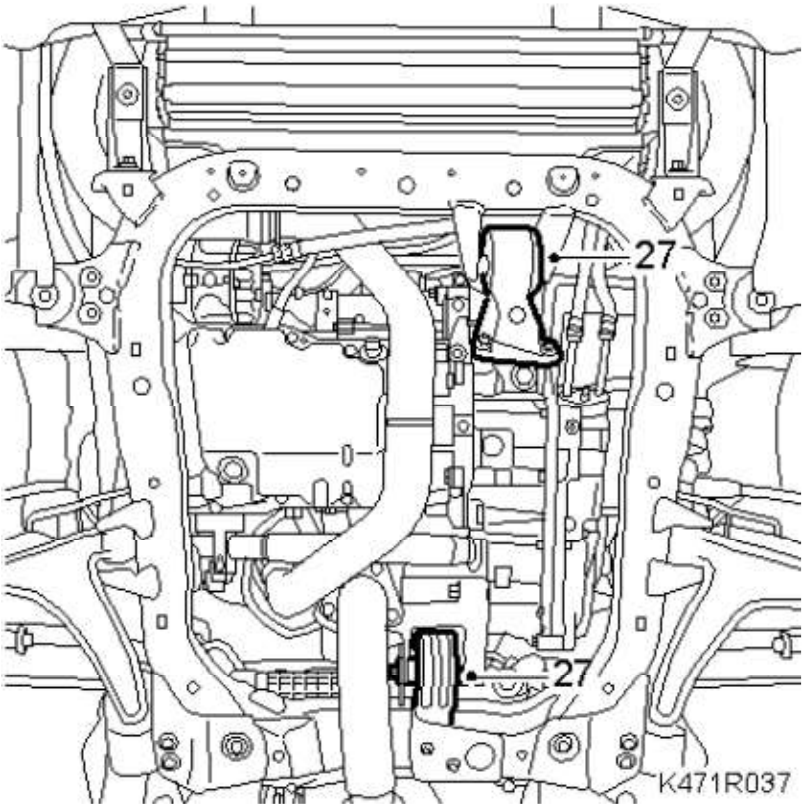

28.

Set up 83 96 145 Centring tool kit, subframe - engine and check that the engine is located correctly in relation to the subframe. Remove the centring tool.

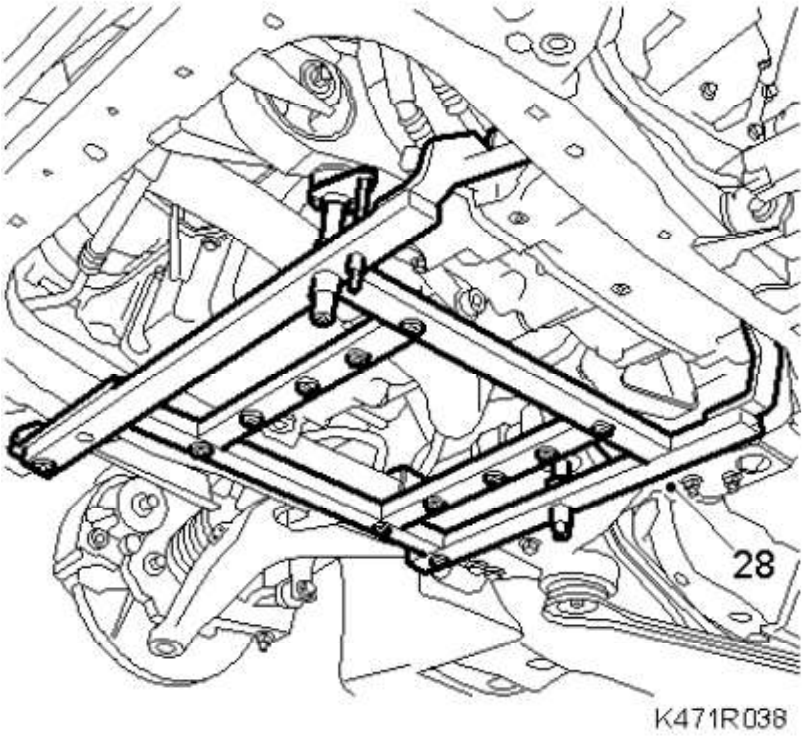

29. Fit the radiator brackets to the subframe. Remove the straps.

    Tightening torque 47 Nm (35 lbf ft)

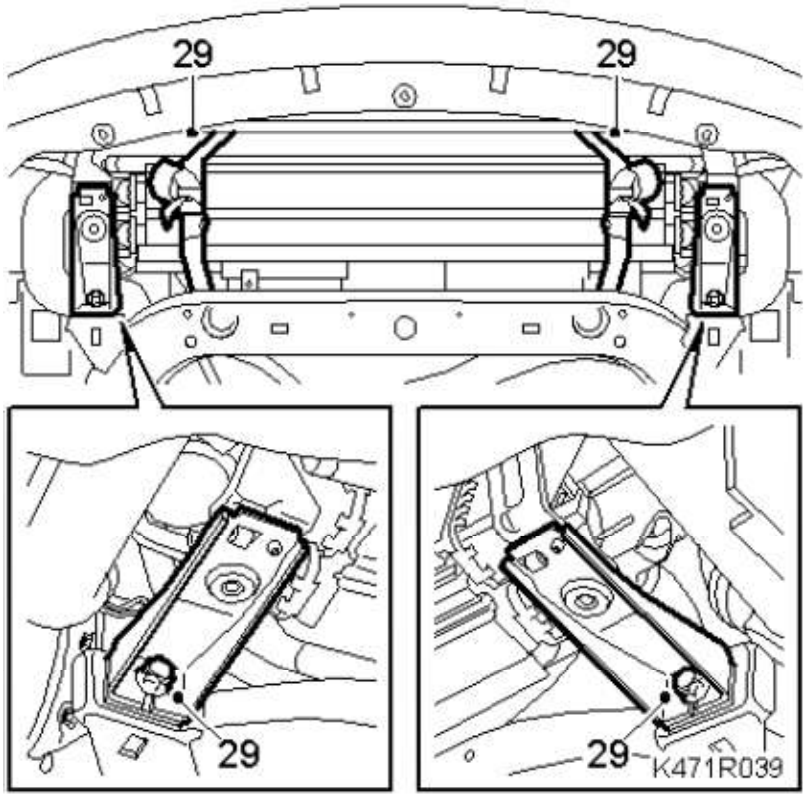

30. Fit the clamps holding the power steering pipe to the subframe.

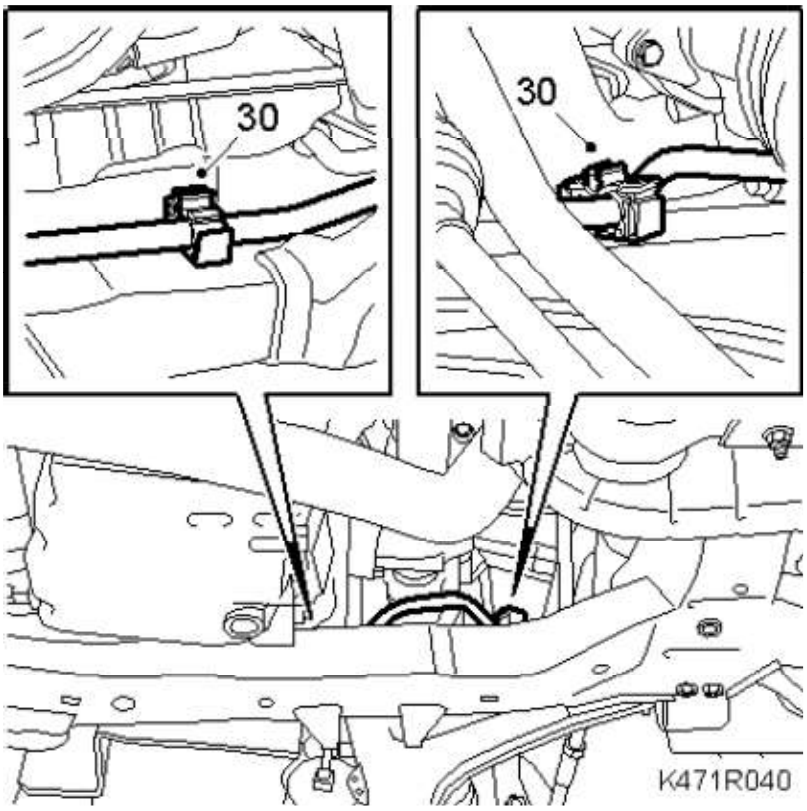

31. Fit the steering gear to the subframe.

    Tightening torque 50 Nm + 60° (37 lbf ft + 60°)

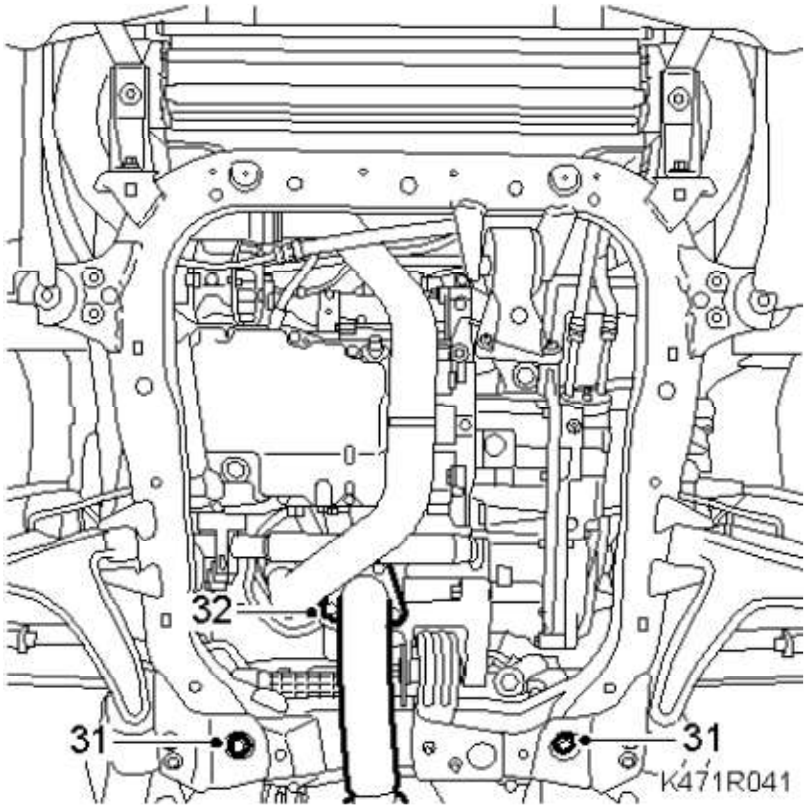

32. Fit the exhaust system.

Tightening torque: 25 Nm (18 lbf ft)

Important

The flexible bellow on the front section of the exhaust system must not be bent more than 5° from its neutral line. This means that if the front exhaust system is left hanging freely, it must not be bent more than by its own weight.

If the strain on the pipe is too great, its component parts will be permanently deformed. This can cause noise, leaks and eventually complete breakdown.

33. Fit the front wing liner section.

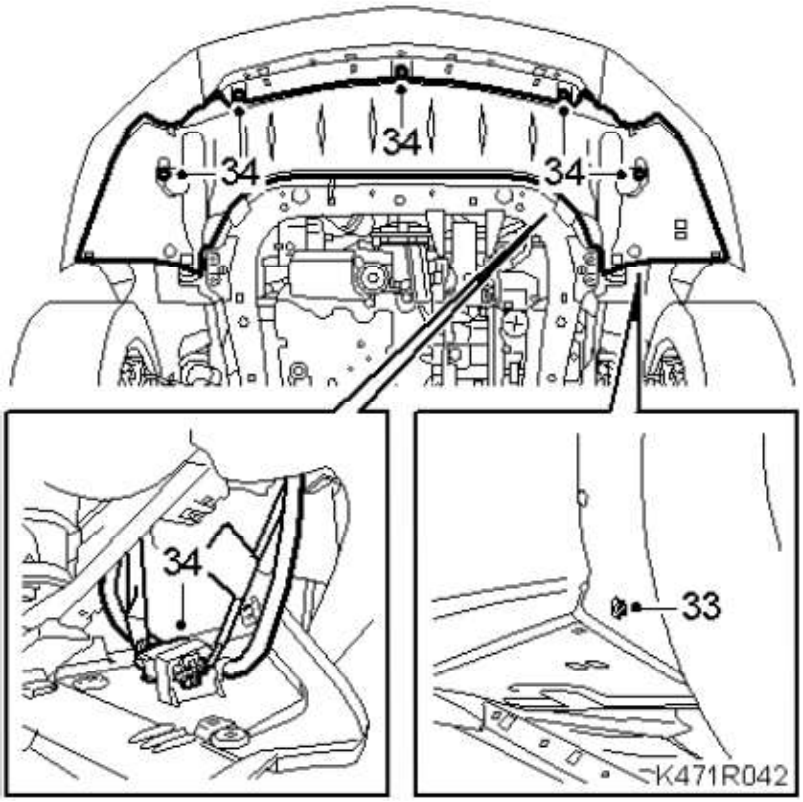

34. Fit the connector. Fit the front spoiler shield. **CV:** Fit Chassis reinforcement, front subframe, CV, petrol.

35. Fit the front wheels.

36.

Lower the car and fit the bumper shell upper mountings.

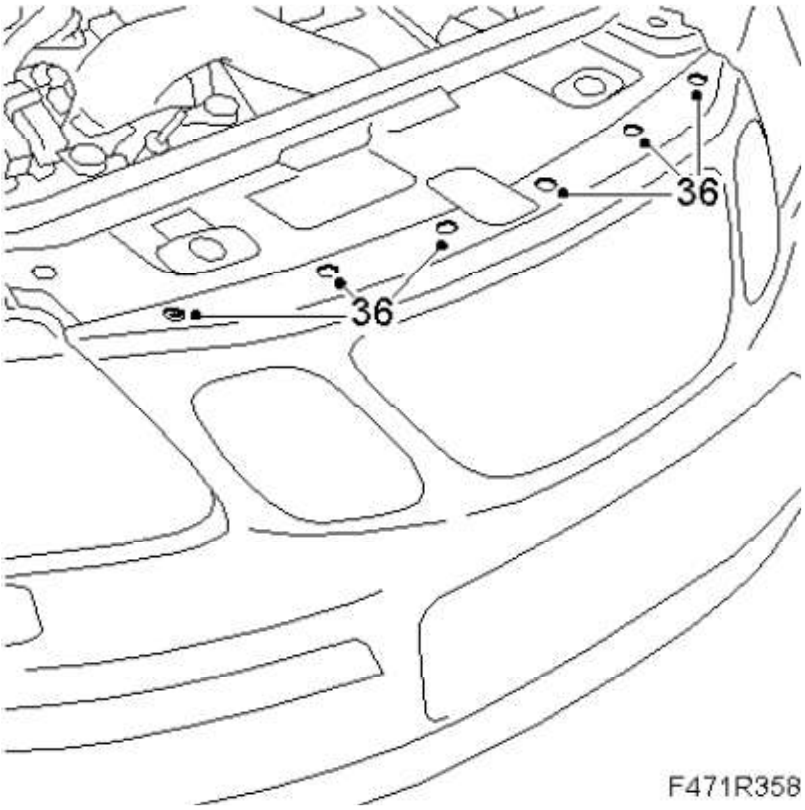

37. Check that the upper radiator guides engage their brackets.

38. Fit the quick-release coupling to the clutch slave cylinder. Remove the hose pinch-off pliers. Make sure the connection is secured in the correct position.

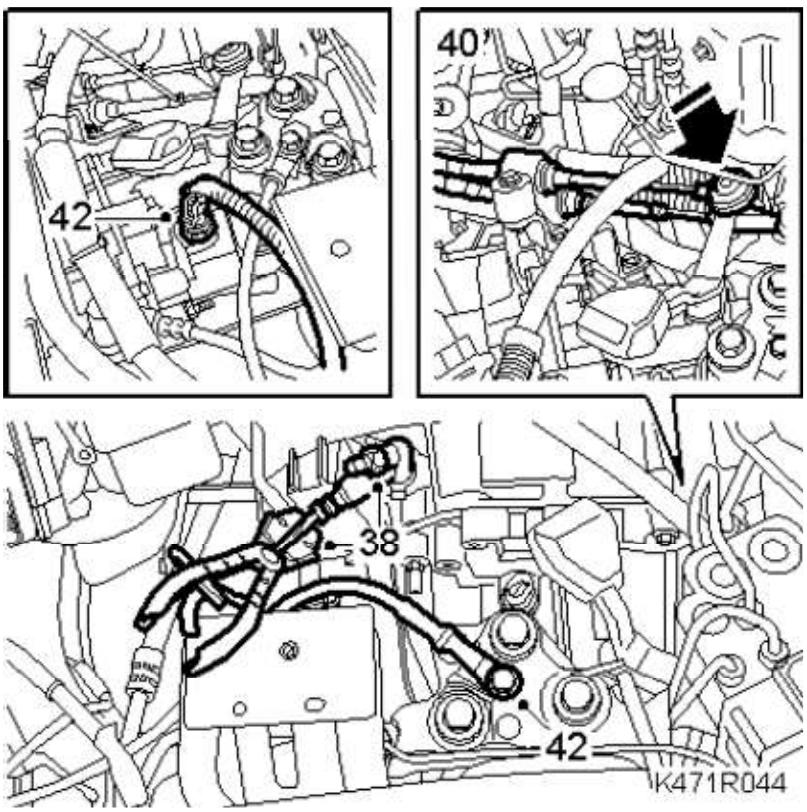

39. Bleed the clutch. See Bleeding the clutch hydraulic system in the car.

40. Attach the gear cables to the gearbox.

41. Check the gear positions and adjust if necessary as described in Adjusting gear cables.

42. Fit the reversing light switch connection and the ground cable to the engine mounting.

    Tightening torque 18 Nm (13 lbf ft)

43. Fit the battery tray and the bonnet switch connector.

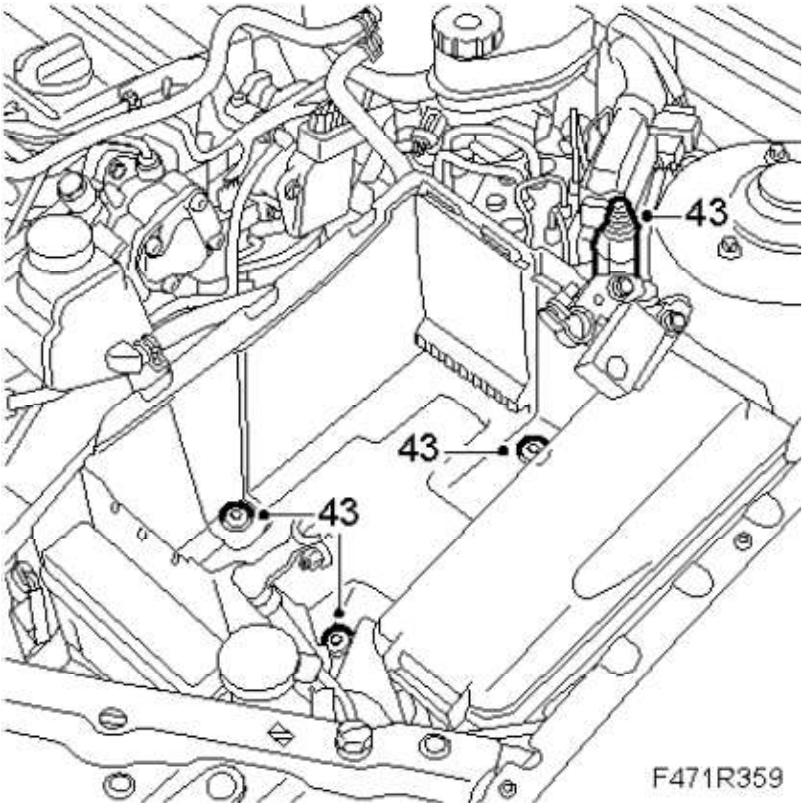

44. Fit the cooling pipe and the battery.

45. Fit the battery cover.

46. Fit the upper engine cover.

47. Remove the wing covers.

48. Carry out Measures after disconnecting the battery.

49. Test drive the car. Check the position of the steering wheel when driving straight ahead on a level road. Adjust if needed.